Panasonic Projector

PT-DW7000

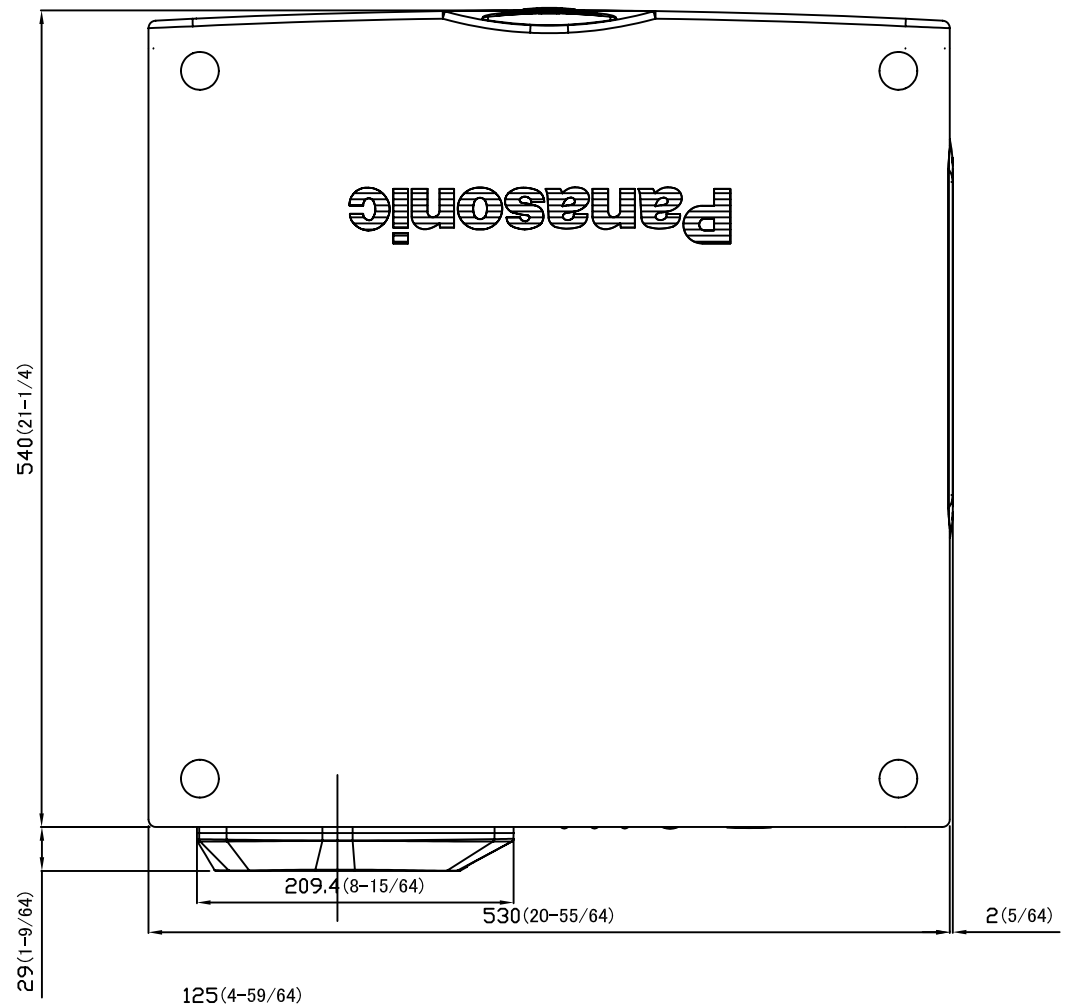

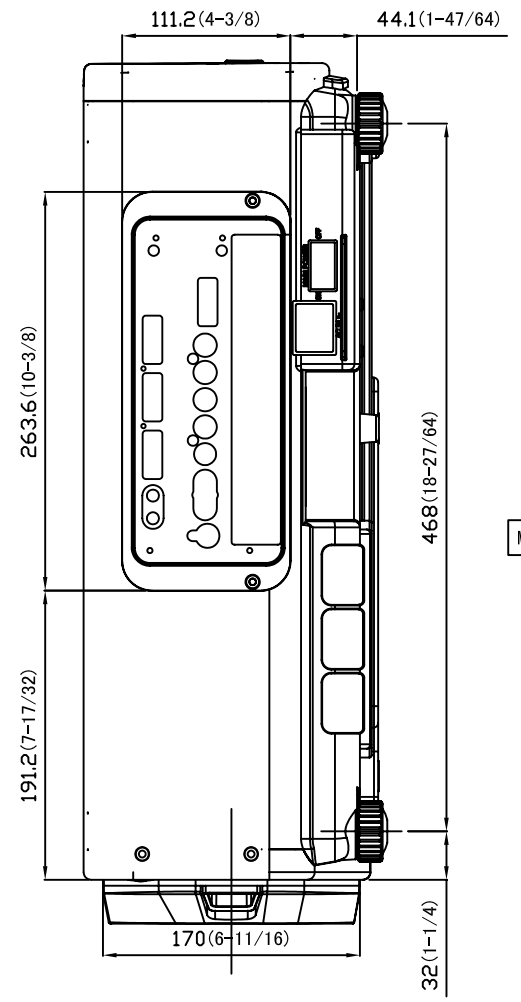

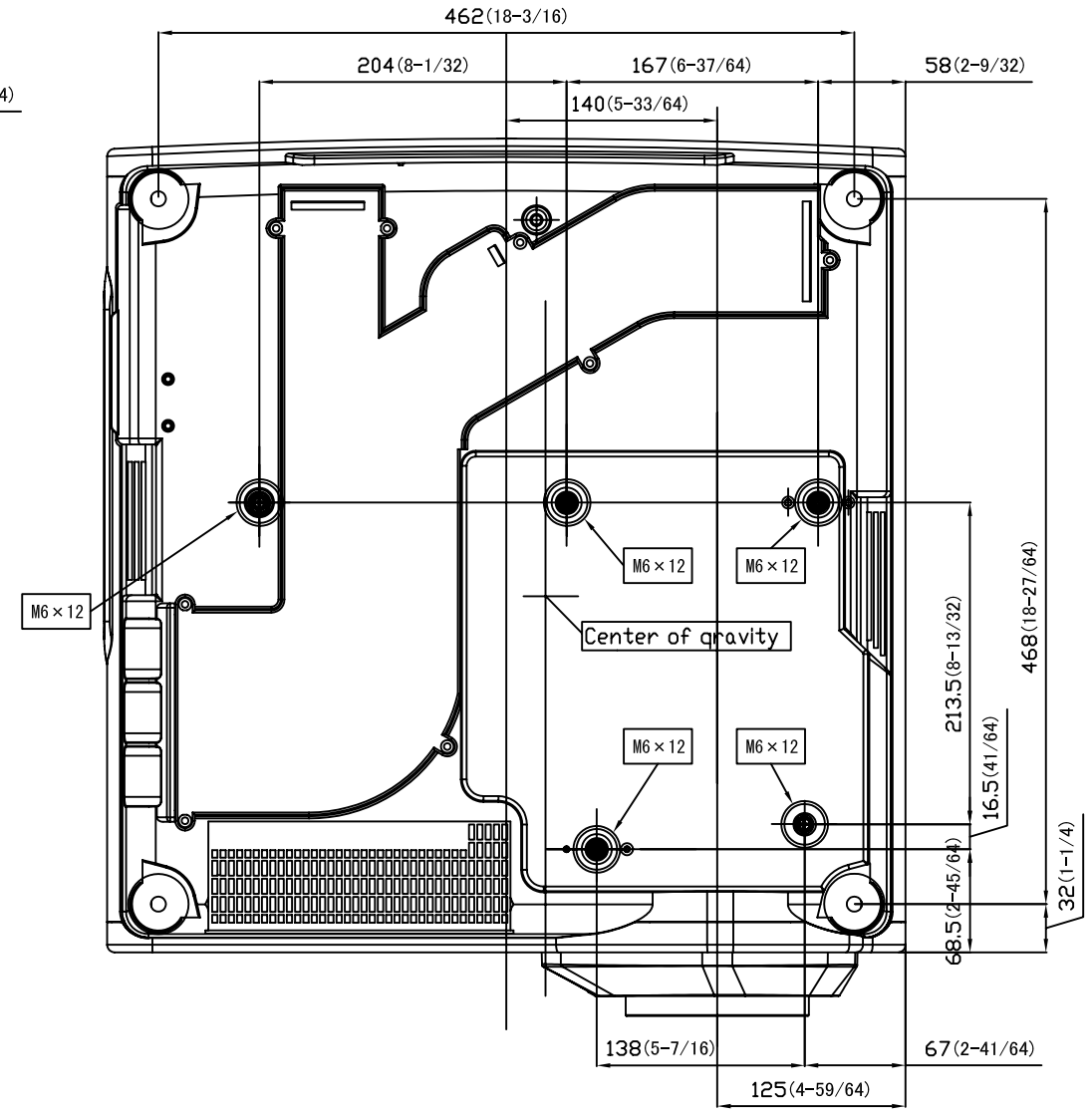

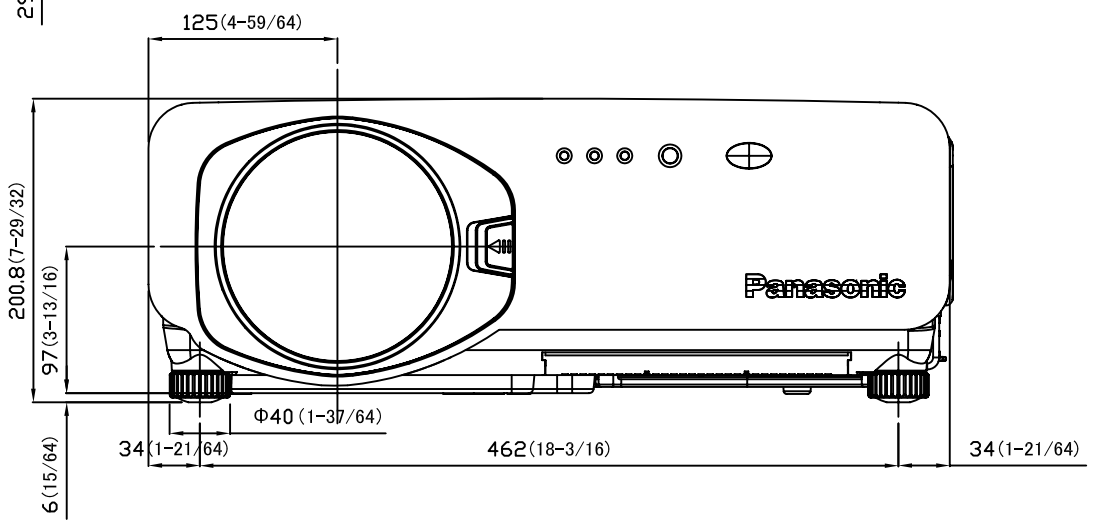

mm (inches)

2004-4-12