Panasonic Projector

PT-D7700

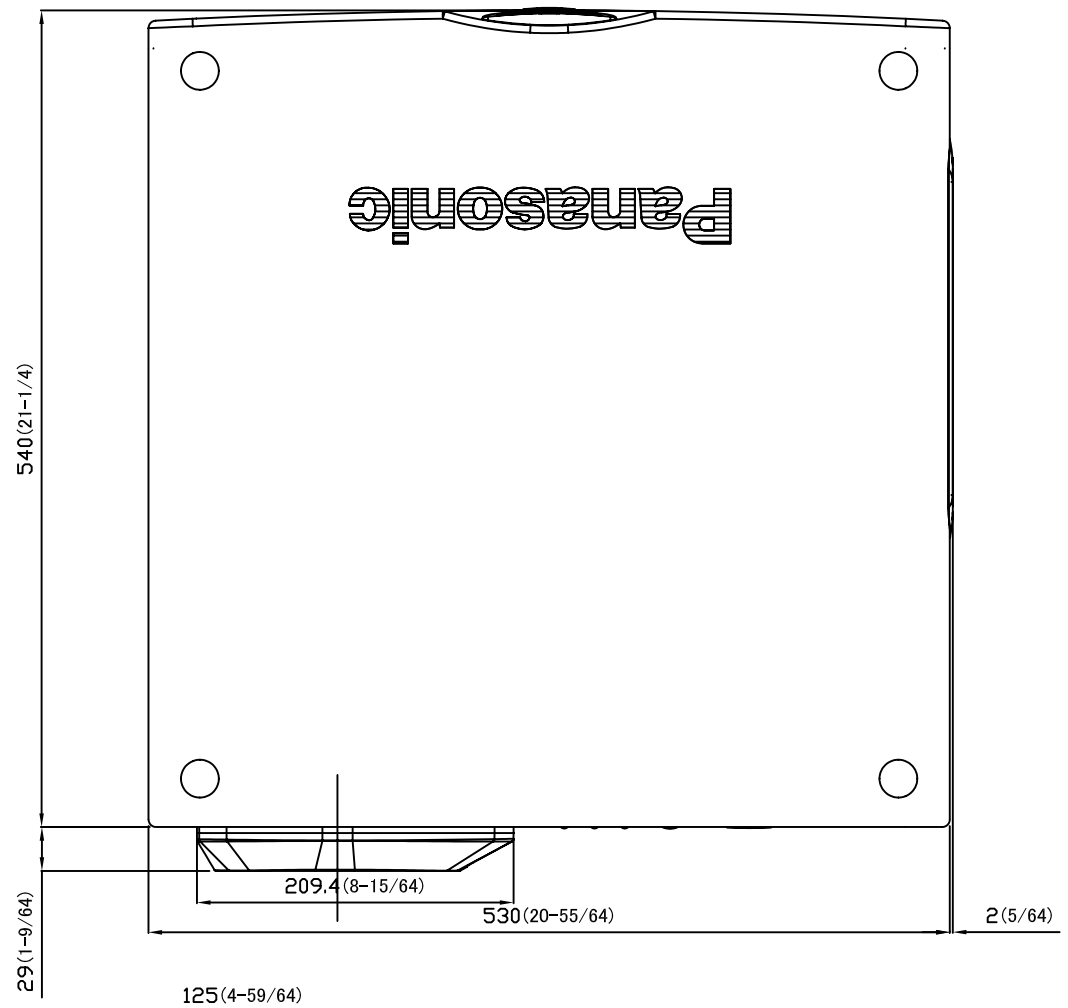

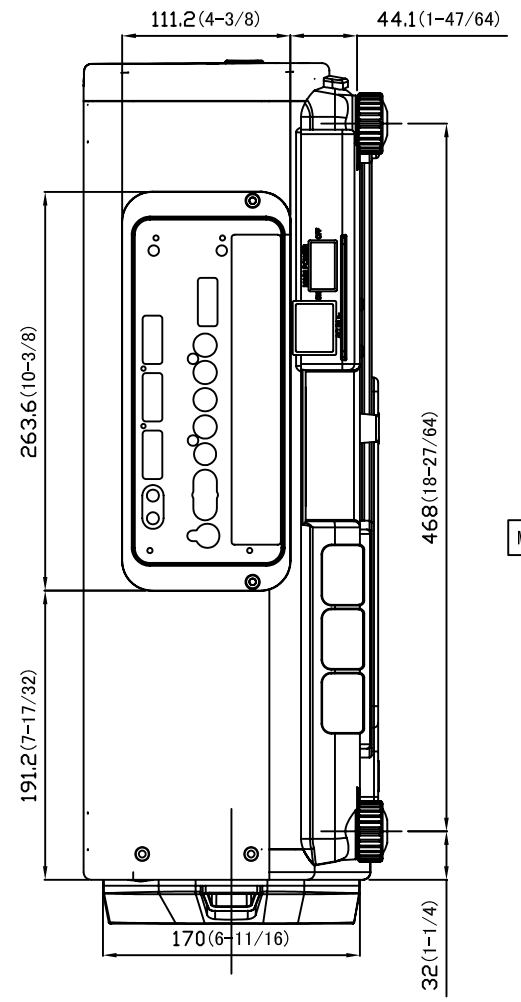

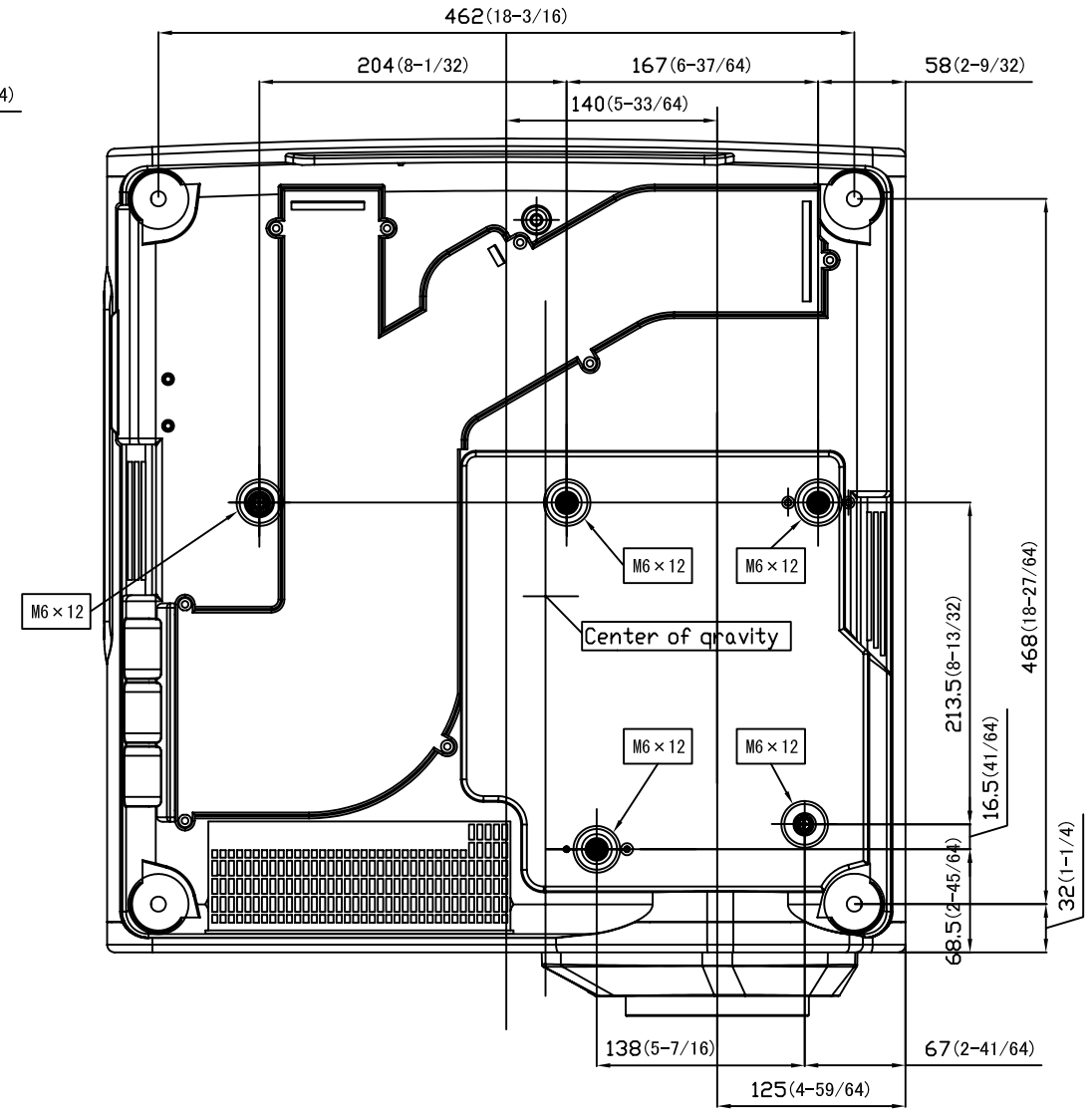

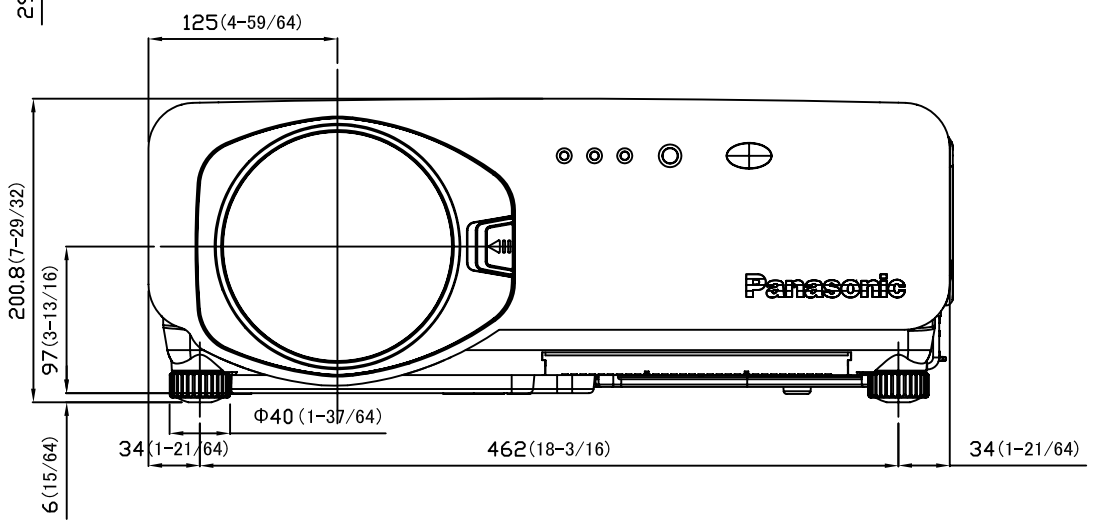

mm (inches)

2004-4-12